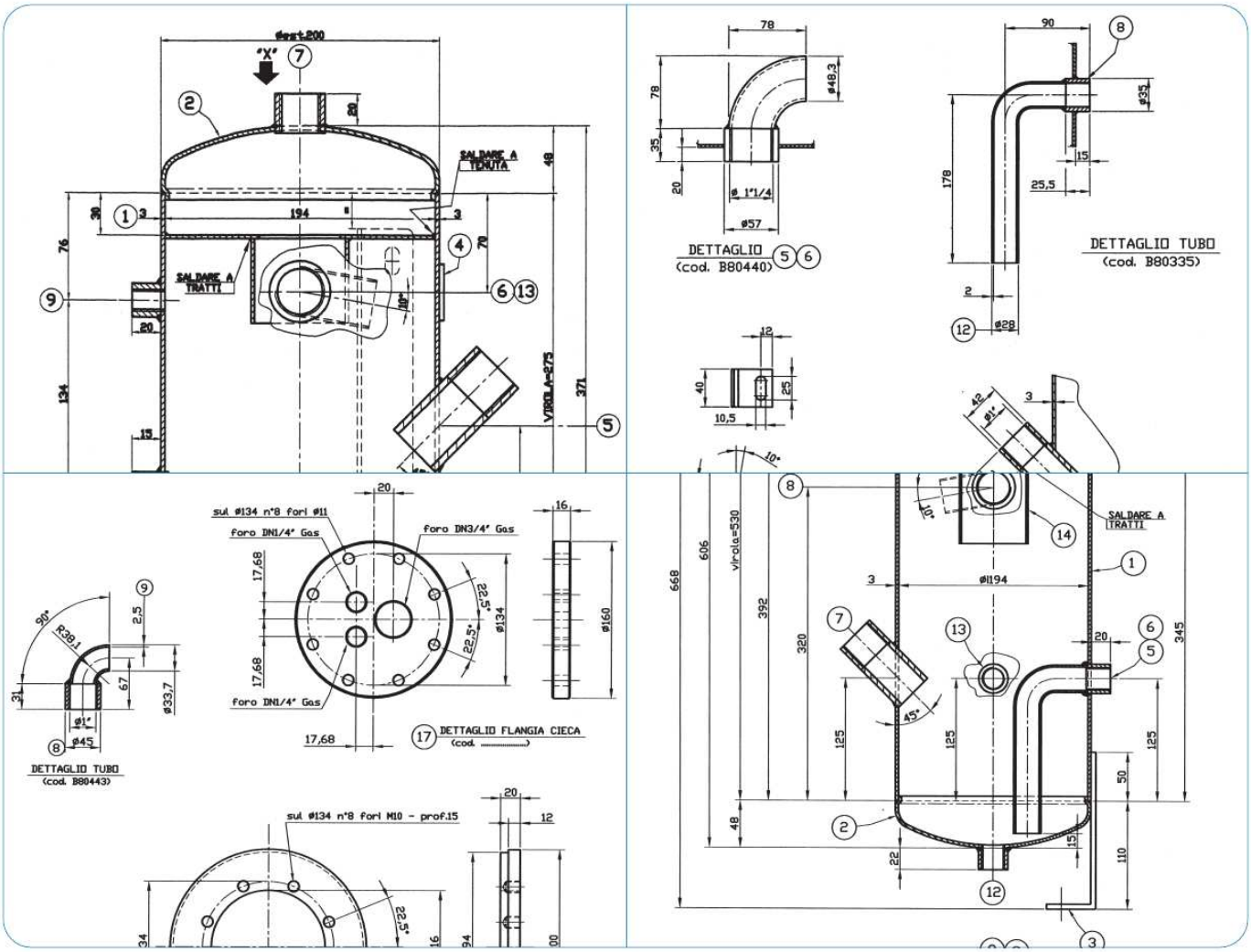SEPARATORI - AIR OIL SEPARATORS